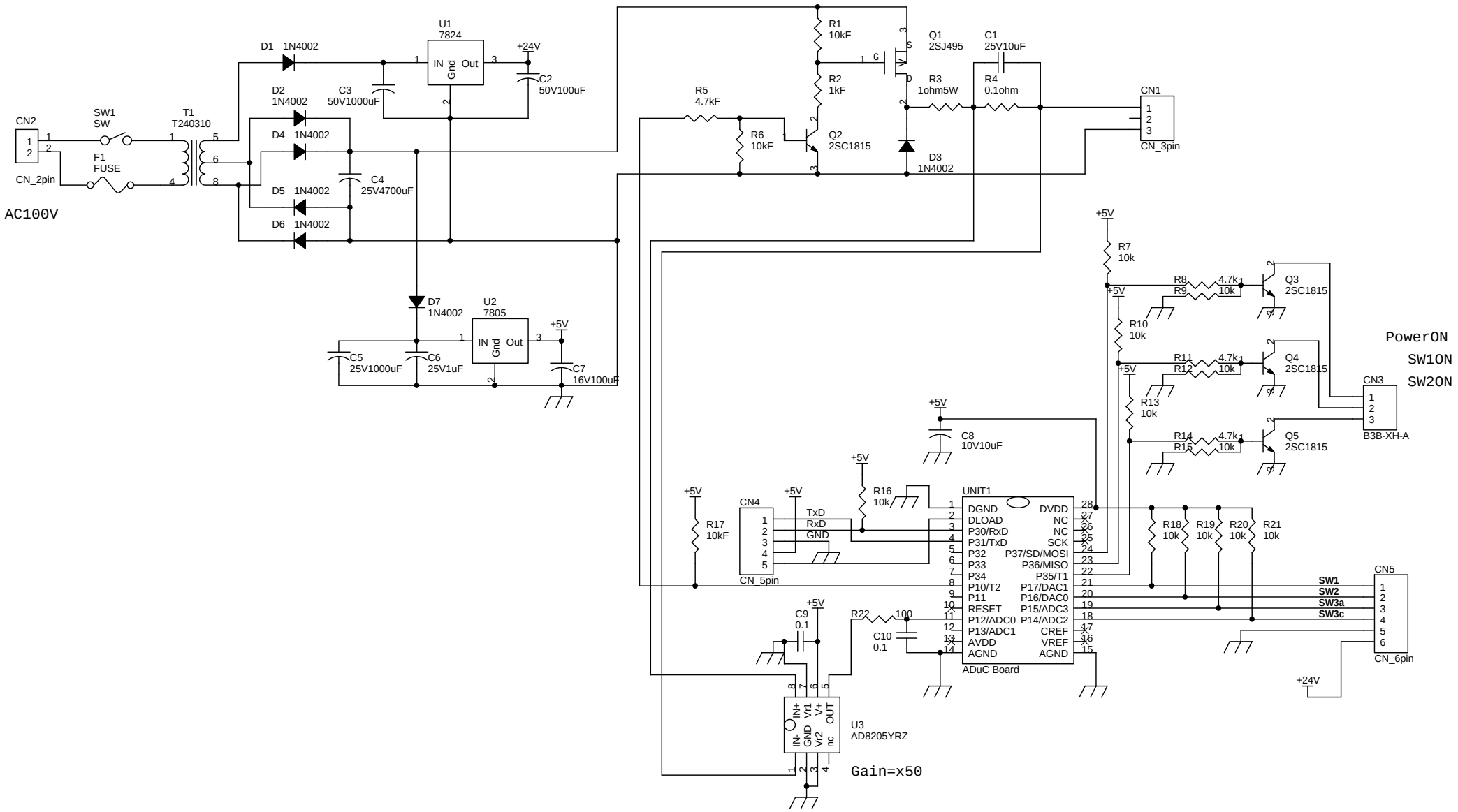

Title	Bell Box v0	
Size Custom	Document Number B225	Rev 1
Date: Tuesday, December 17, 2019	Sheet 1 of 1	