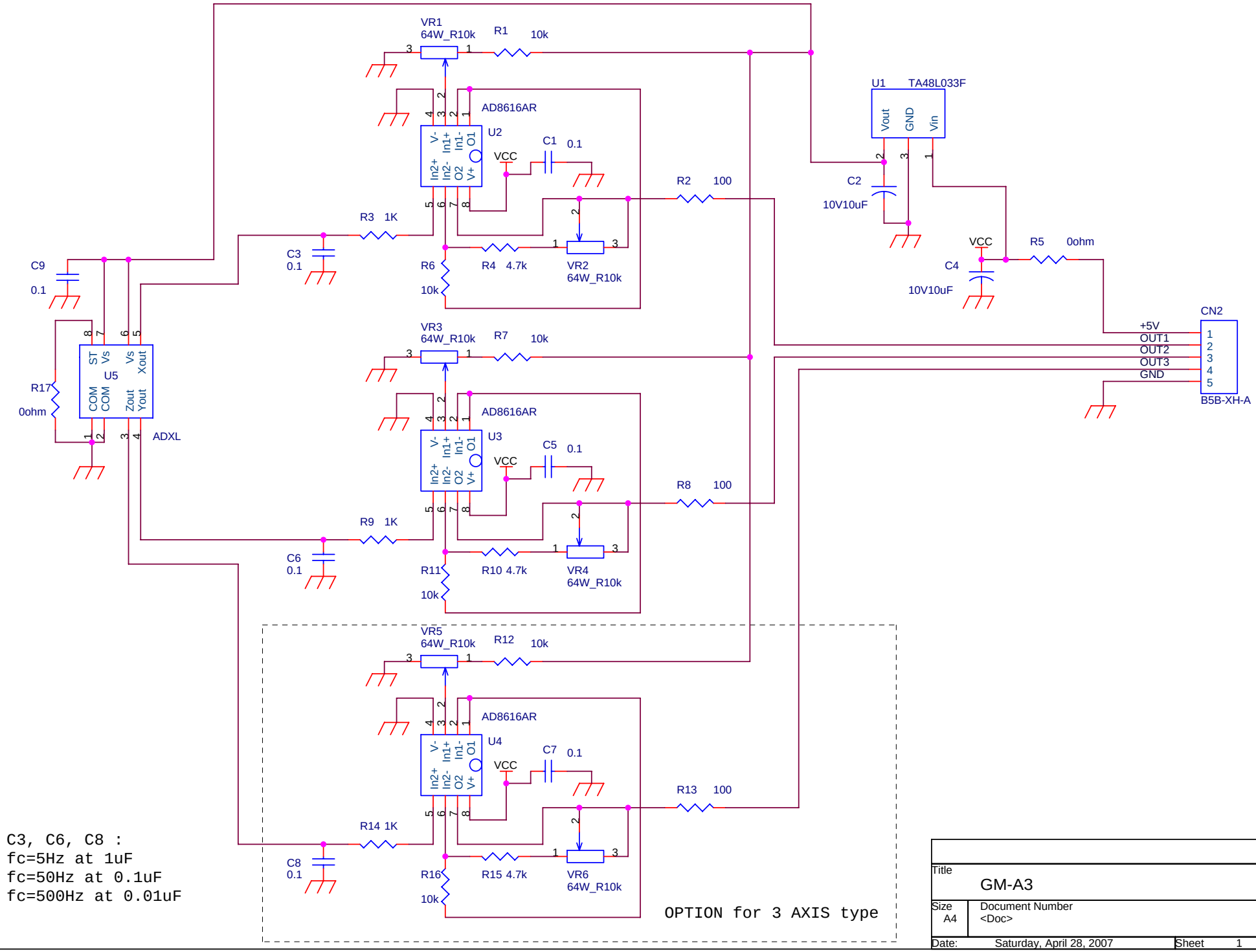

C3, C6, C8 :
fc=5Hz at 1uF
fc=50Hz at 0.1uF
fc=500Hz at 0.01uF

Title	GM-A3	
Size A4	Document Number <Doc>	Rev 1
Date: Saturday, April 28, 2007	Sheet 1 of 1	